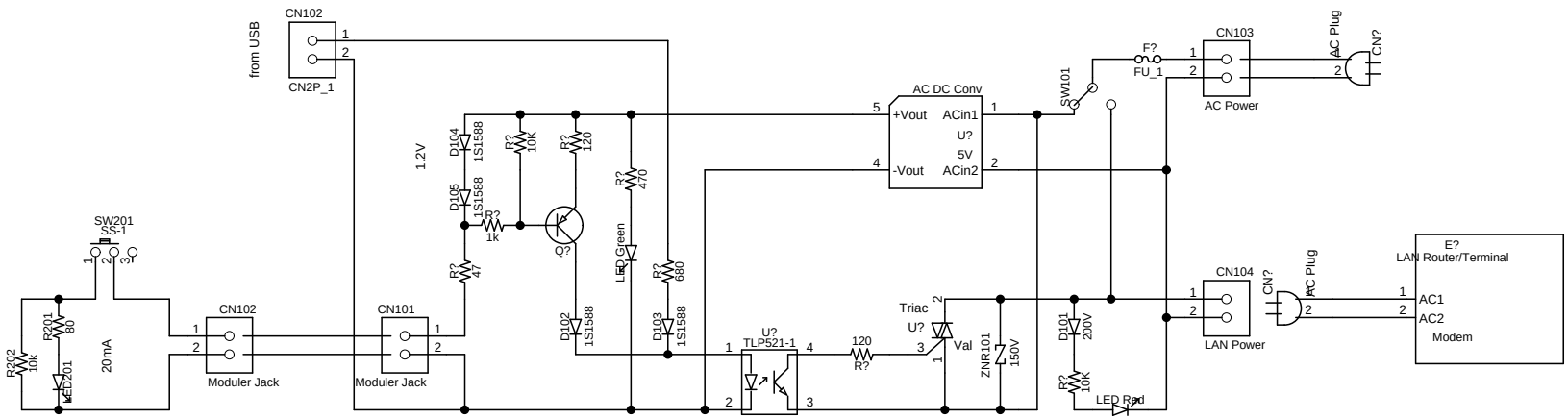

TITLE	DRAWING_No.

SHEET	DATE	DESIGN
/		